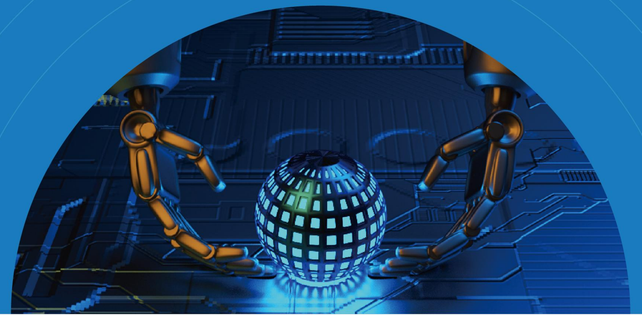

合肥中辰轻工机械有限公司

合肥总部地址

安徽省合肥经济技术开发区锦绣大道206号
邮编：230601
网址：www.hfqj.com

宝鸡分公司

陕西省宝鸡市陈仓区西虢大道27号
邮编：721300

中国销售 Domestic Sales

电话：0551-62552086 / 15209886996
邮箱：infohfzc@163.com

2020年V1.0版
Version 1.0, 2020

Hefei Zhongchen Light Industrial Machinery Co.,Ltd.

Company Headquarter Address In Hefei

No.206 Jinxiu Rd.,Economic and Technological Development Zone,Hefei City 230601,Anhui Province,China
Website:www.hfqj.com

Subsidiary Company Address In BaoJi

No. 27 Xiguo Avenue, Chencang District, Baoji City721300, Shanxi Province, China

海外销售 International Sales

(Central International Machinery Co.,Ltd.)
Tel:+86-551-62552070/62552071/62552083
E-mail:infohfzc@163.com

了解更多中辰信息，请扫描二维码
Scan QR Code for More Info

网站/Website　　微信/Wechat

中辰轻机
HF.ZHONG CHEN

Zhongchen Light Industrial Machinery

智能制造和干包装设备解决方案

Intelligent Manufacturing & Dry Packaging Equipment Solutions

公司简介
Company Profile

合肥中辰轻工机械有限公司宝鸡分公司是以制造智慧农业、饮料、酒水、调味品等行业的智能自动化包装和物流设备、以及安装、调试、维护、配件供应等为主的现代化企业。

合肥中辰轻机宝鸡分公司自动化包装装备已成功应用于康师傅、百事可乐、恒大冰泉、青岛啤酒、喜力啤酒、奥瑞金等国内外知名企业，并且远销到菲律宾、印度、韩国、摩洛哥、委内瑞拉、加拿大、赤道几内亚、中东等国家和地区。

Baoji Subsidiary Company of Hefei Zhongchen Light Industry Machinery Co., Ltd. is a modern enterprise mainly engaged in manufacturing intelligent automatic packaging and logistics equipment, installation, commissioning, maintenance and spare parts supply for intelligent agriculture, beverage, beer, seasoning and other industries.

The automatic packaging machines have been successfully provided to famous companies like Master Kong, Pepsi, Evergrande Spring, Tsingtao Beer, Heineken, ORG, as well as international customers in Philippine, India, South Korea, Morocco, Venezuela, Canada, Equatorial Guinea, Middle East etc.

CONTENTS
目录

机器人码垛机
Robot Palletizer 03

龙门码垛机
Mechanical Palletizer 05

中高位卸瓶(罐)垛机
High (Middle) Bed Bulk Bottle(Can) Depalletizer 07

低位卸瓶垛机
Low bed Bulk Bottle Depalletizer 09

卸箱垛机
Crate Depalletizer 11

彩膜膜包机
Film Shrink Packer 13

半托膜包机
Tray Shrink Film Packer 15

纸箱包装机
Wrap-around Carton Packer 17

其它干包装设备
Other Dry Packaging Equipment 18

机器人码垛机
Robot Palletizer

机器人码垛机
Robot Palletizer

机器人码垛机可按照不同的物料包装、码垛顺序、进行参数设置，实现不同类型包装物料的码垛作业。

机器人码垛机是由输包线、编组转箱机构或编组机器人、预编组平台、机器人、输垛线、板仓机构以及电气控制系统等部件组成。

Robot palletizer can realize different types packs palletizing by parameters setting for different product packs and stacking sequence.

The machine consists of pack conveyor, packs turning & formation mechanism or formation robot, pre-formation table, robot, pallet conveyor, pallet magazine, electrical control system.

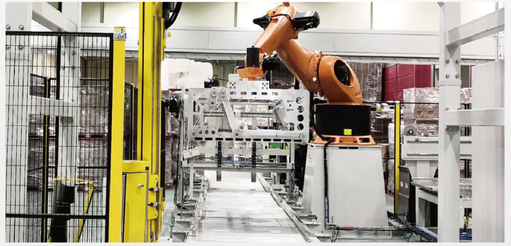

部件清单
Parts List

1、差速分箱	Packs divider
2、转箱机构	Packs turning device
3、编组平台	Formation table
4、上垛滚筒	Pallet feeding roller
5、垛板仓	Pallet magazine
6、码垛机器人	Palletizing robot
7、隔板机器人	Layer sheet insertion robot
8、缠绕机	Stretch wrapper
9、卸垛滚筒	Pallet discharge roller
10、防护栏	Safety fence

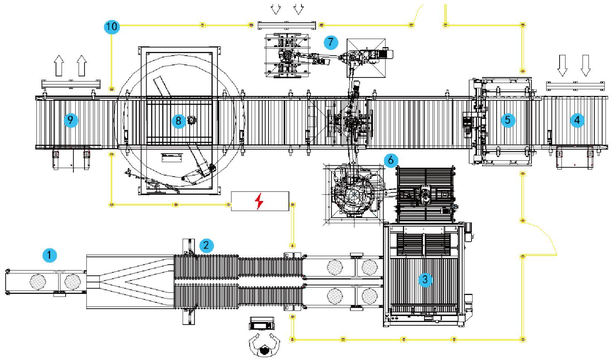

超高速机器人码垛机
High Speed Robot Palletizer

部件清单
Parts List

1、差速分箱	Packs divider
2、编组机器人	Pack formation robot
3、编组推箱平台	Formation table
4、上垛滚筒	Pallet feeding roller
5、垛板仓	Pallet magazine
6、码垛机器人	Palletizing robot
7、隔板机器人	Layer sheet insertion robot
8、缠绕机	Stretch wrapper
9、卸垛滚筒	Pallet discharge roller
10、防护栏	Safety fence

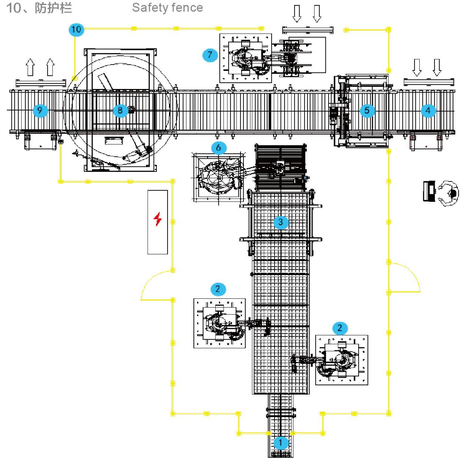

设备特点
Machine Features

1、触摸式屏幕，可视化编组配方，操作便捷；
2、简化运动控制程序，提高设备运行效率；
3、结构简洁，故障率低，易维修保养，维护成本低；
4、采用国际品牌元器件，质量、性能可靠；
5、配置完善的安全防护、挂牌上锁系统，确保操作维护安全性。

1.HMI and visual formation recipe, easy for operation;
2.Simplified running control program, improving operation efficiency;
3.Simple structure and lowest failure rate, easier and cheaper for maintenance;
4.International components adopted, guaranteed quality and performance;
5.Safety protection and LOTO system, guaranteed the safety in operation & maintenance.

主要参数 Main Parameters	
产能范围 Capacity Range	20 -150箱/分钟系列化机型 20~150 packs/min
适用范围 Applicable	纸箱、塑料箱、袋类、桶装、膜包产品等 plastic crate, bags, barrel, film pack etc

龙门码垛机
Mechanical Palletizer

龙门式码垛机
Mechanical Palletizer

码垛机可按照不同的物料包装、码垛顺序、进行参数设置，实现不同类型包装物料的码垛作业。

龙门式码垛机是由输包线、编组转箱机构或编组机器人、预编组平台、升降主机、输垛线、板仓机构以及电气控制系统等部件组成。

Mechanical palletizer can realize different types packs palletizing by parameters setting for different product packs and stacking sequence.

The machine consists of pack conveyor, packs turning & formation mechanism or formation robot, pre-formation table, lifting mechanism, pallet conveyor, pallet magazine, electrical control system.

部件清单
Parts List

1、差速分箱	Packs divider
2、转箱机构	Packs turning device
3、编组平台	Formation table
4、升降主机	Lifting unit
5、上垛输送	Pallet feeding conveyor
6、垛板仓	Pallet magazine
7、缠绕机	Stretch wrapper
8、卸垛输送	Pallet discharge roller
9、防护栏	Safety fence

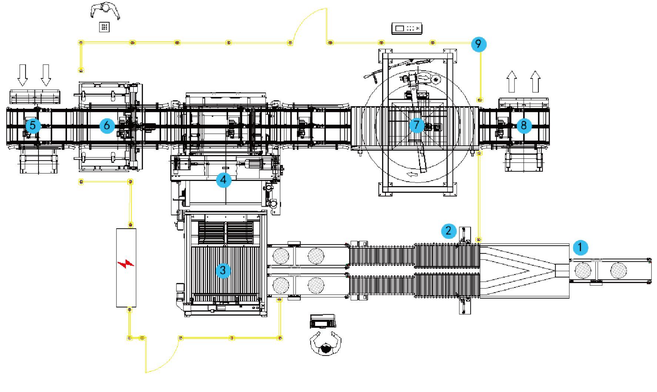

超高速龙门码垛机+编组机器人组合
High Speed Mechanical Palletizer + Formation Robot

部件清单
Parts List

1、差速分箱	Packs divider
2、编组机器人	Pack formation robot
3、编组推箱平台	Formation table
4、上垛滚筒	Pallet feeding conveyor
5、垛板仓	Pallet magazine
6、升降主机	Lifting unit
7、插隔板机	Layer sheet insertion
8、缠绕机	Stretch wrapper
9、卸垛滚筒	Pallet discharge roller
10、防护栏	Safety fence

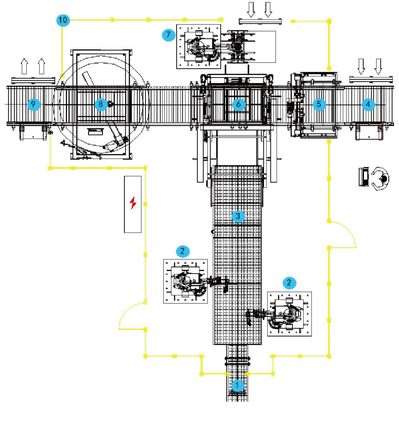

设备特点
Machine Features

1、触摸式屏幕，可视化编组配方，操作便捷；
2、主电机采用全伺服配置，提速快，运行精确可靠；
3、安全性极高，主机配置断链保护功能，德国进口RBPS导轨刹车器（可选），机架安装维修安全挡块，保证维修安全；
4、采用国际品牌元器件，质量、性能可靠。

1.HMI and visual formation recipe, easy for operation;
2.Machine motor adopts servo type, speed up fast, accurate and reliable operation;
3.Safety guaranteed, main chain has broken protection system and safety block installed on frame for maintenance. Germany RBPS rail brake as option;
4.International components adopted, guaranteed quality and performance.

主要参数 Main Parameters	
额定产能 Capacity Range	20 - 150箱/分钟系列化机型 20~150 packs/min
适用范围 Applicable	纸箱、塑料箱、袋类、桶装、膜包产品等 carton, plastic crate, bags, barrel, film pack etc

中/高位卸瓶(罐)垛机
High / Middle Bed Bulk Bottle(Can) Depalletizer

中/高位卸瓶(罐)垛机
High / Middle Bed Bulk Bottle (Can) Depalletizer

卸垛机是对各种金属罐、玻璃瓶、塑料瓶等进行分层卸垛。

中高位卸瓶（罐）垛机是由卸瓶（罐）垛主机部分、网链输送部分、隔板输送部分、垛板输送部分、板仓部分以及电气控制系统等部件组成。

Depalletizer is to destack metal cans, glass bottles, PET bottles layer by layer.

High / Middle Bed Bulk Bottle (Can) Depalletizer consists of main body, container conveyor, layer sheet remover, pallet conveyor, pallets magazine and electrical control system.

部件清单
Parts List

1、上垛输送	Pallet feeding conveyor
2、解垛平台	Pallet de-strap platform
3、隔板输送	Layer sheet conveyor
4、层隔板仓	Layer sheet magazine
5、顶隔板仓	Top frame magazine
6、升降主机	Lifting unit
7、网链输送	Table top chain conveyor
8、垛板仓	Pallet magazine
9、卸垛输送	Pallet discharge conveyor
10、防护栏	Safety fence

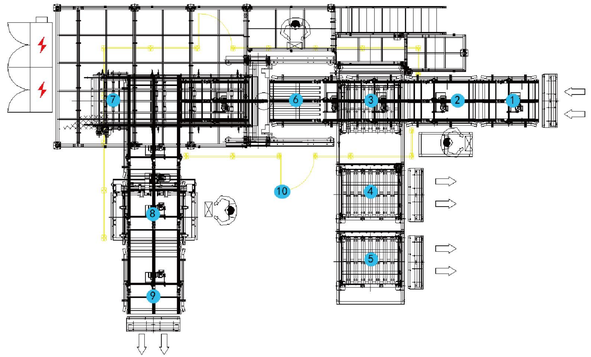

设备特点
Machine Features

1、触摸式屏幕，操作便捷；
2、主电机采用双减速机配置，运行稳定可靠；
3、推罐装置装有四周挡板，倒罐率低；
4、主机链条配置有断链保护功能，安全防护等级高；
5、卸垛效率高，适应多种垛型及瓶型，调整方便；
6、采用国际品牌元器件，质量、性能可靠。

1.HMI adopted, easy for operation;
2.Machine motor adopts dual gearbox, running stable;
3.Surrounding baffle at containers pushing device, avoiding falling;
4. Main chain has broken protection system and safety block installed on frame for maintenance;
5.Suitable for multiple pallet and container type, easy change over;
6.International components adopted, guaranteed quality and performance.

主要参数 Main Parameters	
额定产能 Capacity Range	18,000 - 90,000 瓶（罐）/ 时系列化机型 18,000~90,000 containers/hour
适用范围 Applicable	各种瓶、罐包装物 Multiple bottles, cans etc

低位卸瓶垛机
Low bed Bulk Bottle Depalletizer

低位卸瓶垛机
Low bed Bulk Bottle Depalletizer

卸垛机是对各种金属罐、玻璃瓶、塑料瓶进行分层卸垛。

低位卸瓶垛机是由低位卸瓶垛机主机部分、网链送瓶部分、隔板输送部分、垛板输送部分、板仓部分以及电气控制系统等部件组成。

Depalletizer is to destack metal cans, glass bottles, PET bottles layer by layer.

Low bed Bulk Bottle Depalletizer consists of main body, container conveyor, layer sheet remover, pallet conveyor, pallets magazine and electrical control system.

部件清单
Parts List

1、上垛输送	Pallet feeding conveyor
2、解垛平台	Pallet de-strap platform
3、升降主机	Lifting unit
4、层隔板仓	Layer sheet magazine
5、顶隔板仓	Top frame magazine
6、摇臂机构	Rocker arm
7、网链输送	Table top chain conveyor
8、垛板仓	Pallet magazine
9、卸垛输送	Pallet discharge conveyor
10、防护栏	Safety fence

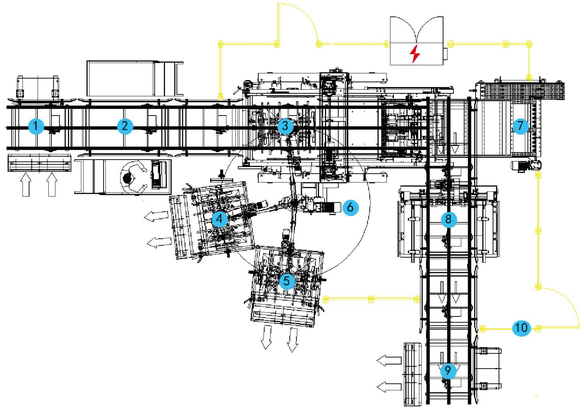

设备特点
Machine Features

1、触摸式屏幕，操作便捷；
2、采用伺服控制（升降、输送小车，取隔板提升，旋转），提速快，运行精确可靠；
3、适应多种垛型及瓶型，调整方便；
4、采用国际品牌元器件，质量、性能可靠；
5、主机和辅机配置完善的安全防护系统。

1.HMI adopted, easy for operation;
2.Machine motor adopts servo control for lifting and rotate, speed up fast, accurate and reliable operation;
3.Suitable for multiple pallet and container type, easy change over;
4.International components adopted, guaranteed quality and performance;
5.Safety protection system for main machine and auxiliary devices.

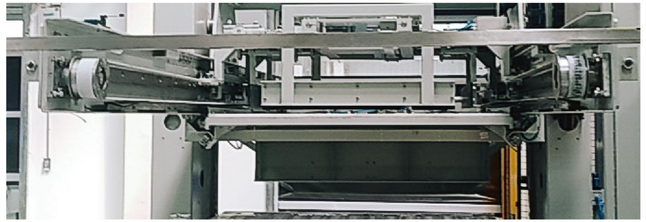

主要参数 Main Parameters	
产能范围 Capacity Range	18,000 - 60,000 瓶/小时系列化机型 18,000~60,000 containers/hour
适用范围 Applicable	玻璃瓶、塑料瓶等包装物 Multiple bottles, cans etc

卸箱垛机
Crate Depalletizer

卸箱垛机
Crate Depalletizer

卸箱垛机主要通过控制移动小车的上下前后移动，把箱子从垛板上放到分箱平台，然后控制整排箱子按顺序的进入输箱带。

卸箱垛机主要由卸箱垛机的主机、分箱台、停箱台、垛板输送部分、板仓部分以及电气控制系统等部件组成。

Crate depalletizer is to relocate crates from pallet onto table by lifting unit moving up and down and back, then control the crates go to crate conveyor in order.

The machine consists of main body, crate discharge table, crate buffer table, pallet conveyor, pallet magazine and electrical control system.

部件清单
Parts List

1、上垛输送	Pallet feeding conveyor
2、升降主机	Lifting unit
3、停箱台	Crate buffer table
4、分箱台	Crate discharge table
5、垛板仓	Pallet magazine
6、卸垛输送	Pallet discharge conveyor
7、防护栏	Safety fence

主要参数 Main Parameters	
额定产能 Capacity Range	20 - 100箱/分钟系列化机型 20~100 crates/min
适用范围 Applicable	塑料箱、纸箱等周转箱 plastic crate, carton box etc

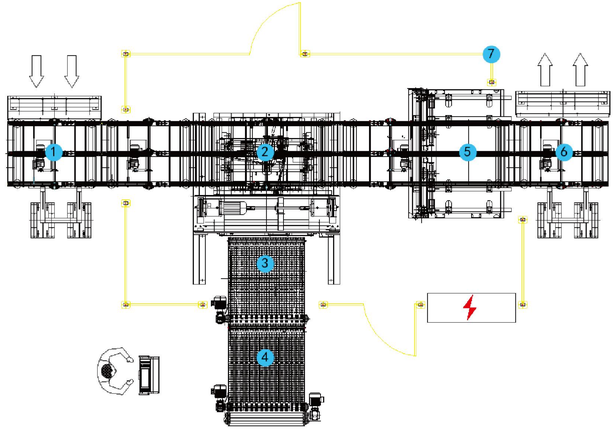

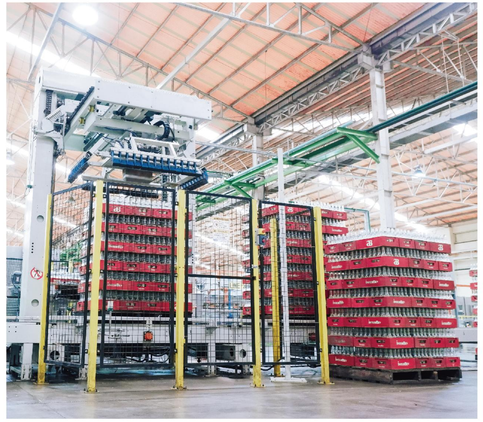

设备特点
Machine Features

1、触摸式屏幕，操作便捷；
2、主电机采用双减速机配置，运行稳定可靠；
3、主机链条配置有断链保护功能，机架安装维修安全挡块，保证操作维修安全；
4、适应多种垛型及瓶型，调整方便；
5、采用国际品牌元器件，质量、性能可靠。

1.HMI adopted, easy for operation;
2.Machine motor adopts dual gearbox, running stable;
3.Main chain has broken protection system and safety block installed on frame for maintenance;
4.Suitable for multiple pallet and container type, easy change over;
5.International components adopted, guaranteed quality and performance.

彩膜膜包机
Film Shrink Packer

彩膜膜包机
Film Shrink Packer

彩膜膜包机分为输送机、包装机、热缩机三大部分，主要由输送机、压瓶机构、上下放膜机构、推瓶机构、接膜机构、压包机构、前后输送机构、机架、阻瓶机构、热收缩、电气控制系统等部分组成。

Film shrink packer consists of container conveyor, packer and shrink oven. Mechanically it has mechanism of container conveyor, container press device, film feeding,container pushing, film wrapping, pack press device, frame, container stopper, heat shrinking tunnel and electrical control.

部件清单
Parts List

1、进瓶输送	Container feeding
2、震动分瓶	Vibration container divider
3、平纸板输送（可选）	Pad feeding (option)
4、分组机构	Grouping device
5、推瓶机构	Container pushing device
6、膜拉伸	Film stretch
7、接膜机构	Film joint device
8、套膜机构	Film wrapping device
9、热收缩炉	Heat shrink oven
10、风冷系统	Cooling system

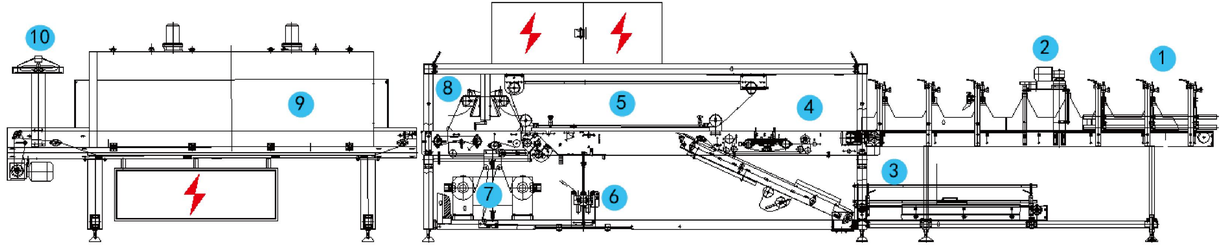

设备特点
Machine Features

1、触摸式屏幕，操作便捷；
2、震动式分瓶，不卡瓶，不挤瓶，输送顺畅；
3、薄膜放卷装置及薄膜恒张力输送，伺服切膜；
4、自动搭接裹膜方式，收缩包装后强度更高；
5、伺服电机控制系统：拨杆进瓶、送膜、切膜、裹膜；
6、精确同步控制，稳定可靠。

1.HMI, easy for operation;
2.Vibration containers dividing without container jam and pushing, smooth running;
3.Film roll feeding in constant tension, servo cutting;
4. Auto lap joint film wrapping, good for high shrinking strength;
5.Servo motor control for container feeding, film feeding, film cutting and wrapping;
6.Precise synchronous control, stable.

主要参数 Main Parameters	
额定产能 Capacity Range	20 - 200包/分单通道或多通道系列化机型 20~200 packs/min single land or multiple lanes.
适用范围 Applicable	各种玻璃瓶、塑料瓶、易拉罐、纸盒等包装物 glass bottles, PET bottles, aluminum cans, carton etc

半托膜包机
Tray Shrink Film Packer

半托膜包机
Tray Shrink Film Packer

半托膜包机分为瓶输送机、托输送、包装机、热缩机四大部分，主要由瓶输送机、托输送机、压瓶机构、上下放膜机构、推瓶机构、接膜机构、压包机构、前后输送机构、机架、阻瓶机构、热收缩、电气控制系统等部分组成。

Tray shrink film packer consists of container conveyor, tray conveyor, packer and shrink oven. Mechanically it has mechanism of container conveyor, tray conveyor, container press device, film feeding, container pushing, film wrapping, pack press device, frame, container stopper, heat shrinking tunnel and electrical control.

部件清单
Parts List

1、进瓶输送	Container feeding
2、震动分瓶	Vibration container divider
3、纸托输送	Tray feeding
4、分组机构	Grouping device
5、推瓶机构	Container pushing device
6、热溶胶机	Hot glue machine
7、膜拉伸	Film stretch
8、接膜机构	Film joint device
9、套膜机构	Film wrapping device
10、热收缩炉	Heat shrink oven
11、风冷系统	Cooling system

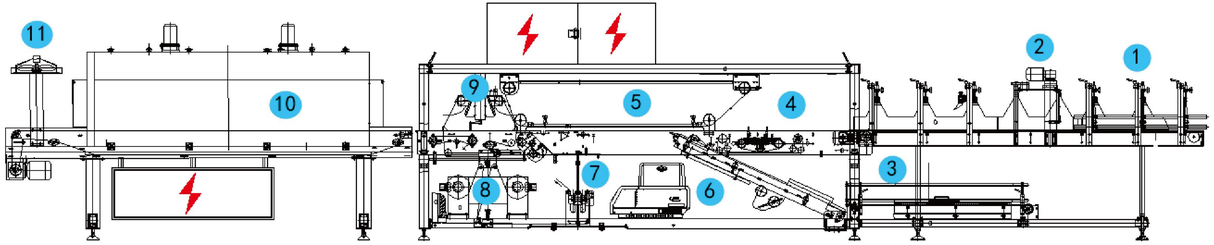

设备特点
Machine Features

1、触摸式屏幕，操作便捷；
2、震动式分瓶，不卡瓶，不挤瓶，输送顺畅；
3、薄膜放卷装置及薄膜恒张力输送，伺服切膜；
4、自动搭接裹膜方式，收缩包装后强度更高；
5、伺服电机控制系统：拨杆进瓶、送托、送膜、切膜、裹膜；
6、精确同步控制，稳定可靠；
7、国际品牌热熔胶机。

1.HMI, easy for operation;
2.Vibration container dividing without container jam and pushing, smooth running;
3.Film roll feeding in constant tension, servo cutting;
4. Auto lap joint film wrapping, good for high shrinking strength;
5.Servo motor control for container feeding, tray feeding, film feeding, film cutting and wrapping;
6.Precise synchronous control, stable;
7.International brand hot glue machine.

主要参数 Main Parameters	
额定产能 Capacity Range	20 - 70 包/分钟系列化机型 20~70 packs/min
适用范围 Applicable	各种玻璃瓶、塑料瓶、易拉罐、纸盒等包装物 glass bottles, PET bottles, aluminum cans, carton etc

纸箱包装机
Wrap-around Carton Packer

设备特点
Machine Features

1、触摸式屏幕，操作便捷；
2、容器分组采用伺服控制，控制精确，运行平稳；
3、水平放板、送板，柔和轻巧便捷，降低损耗划伤；
4、进口热熔胶机，按照运行速度均匀涂胶，在线调节涂胶长度；
5、采用国际品牌元器件，质量、性能可靠。

1.HMI, easy for operation;

2. Container grouping by servo control, precise control and stable running;

3.Horizontal feeding carton plates, soft and convenient, reduce loss and scratch;

4.Imported brand hot glue machine, uniform gluing as per running speed, on line adjusting gluing length;

5.International brand components, stable in performance.

1、送纸输送	Carton conveyor
2、进瓶输送	Container feeding
3、震动分瓶	Vibration bottle dividing
4、分组机构	Grouping device
5、分纸输送	Carton feeding
6、推瓶机构	Container pushing device
7、过渡成型	Transit formation
8、热溶胶机	Hot glue machine
9、成型部分	Formation section

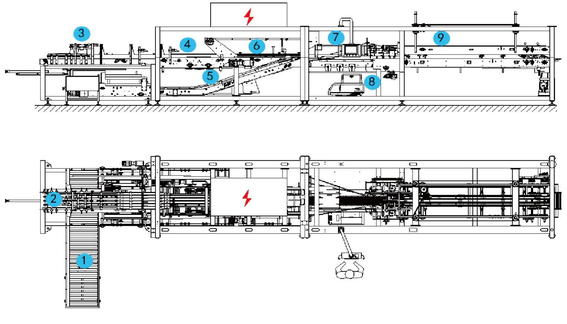

主要参数 Main Parameters	
额定产能 Capacity Range	20 -70 包/分系列化机型 20~70 packs/min
适用范围 Applicable	各种玻璃瓶、塑料瓶、易拉罐、纸盒等包装物 glass bottles, PET bottles, aluminum cans, carton etc

其它干包装设备
Other Dry Packaging Equipment

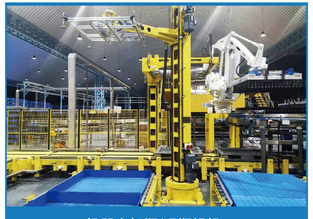

机器人卸瓶/码瓶垛机
Robot Bottle Depalletizer/Palletizer

缠绕机
Stretch Wrapper

卡包机
Multi-Packer

开箱机
Carton Erector

输送系统
Conveyors

装/卸箱机
Decrater / Crater / Carton Packer

提环机
Handle Applicator

封箱机
Carton Sealer